eapc.net

ADDENDUM 2

Addendum #	2	**Date Issued**	Nov. 19, 2026
Project Name | Job #	NDSU Extension Irrigation Redesign		20236271
Bid Date | Time	Thursday, December 3rd, 2026		3:00 PM CT

THIS ADDENDUM AMENDS AND BECOMES PART OF THE CONTRACT DOCUMENTS FOR EAPC PROJECT 20236271 DATED 11/02/2026, AND ADDENDUM #01, DATED 11/12/2026 RESPECTIVELY. EACH BIDDER SHALL ACKNOWLEDGE RECEIPT OF THIS ADDENDUM BY MARKING THE ADDENDUM NUMBER AND DATE ON THE BID FORM.

SPECIFICATIONS

None at this time.

DRAWINGS

A301	REPLACE with attached A301. Inserted correct Alternates Floor Plan.
A441	REPLACE with attached A441. Corrected bollard on wall section..
P801	UPDATE model number for CS-1 on the Domestic Water Balancing Valve Schedule.
1/M201	UPDATE location of EF-1, associated ductwork, and add duct routing note. UPDATE location of LVR-1 and clarify installation elevation.
3/M201	ADD installation elevation note to LVR-2.
4/M201	UPDATE section view and notes to reflect floor plan changes.
E901	UPDATE Panel schedules A and A1 to include GFI breakers.

PRIOR APPROVALS

23 0923 APPROVE Automated Logic as DDC manufacturer.

	Type	Manufacturer/Model
Section 26 5100	A	Columbia Lighting-CBT22
	A1	Columbia Lighting-CBT22
	A2	Columbia Lighting-CBT22
	C	Prescolite-LFCR
	D	Columbia Lighting-PELA
	E	Compass Life Safety-CERSD
	EM	Compass Life Safety-CU2HLS
	T	Columbia Lighting-MPS
	V	Columbia Lighting-67L W D

AA	Beacon Products-VPW
AA1	Beacon Products-VPW

ATTACHMENTS

Pre-Bid Meeting Attendance

A301
A441
P801
M201
E901

EAPC

PLAN HOLDERS LIST
NDSU Nesson Valley Irrigation Research Technology Transfer Center
Ray, North Dakota 58849
EAPC Project: # 20236271

BID DATE: Thursday, December 3, 2026
BID TIME: 3:00 PM CDT

PLAN HOLDER	CONTACT PERSON	ADDRESS	CITY	STATE	ZIP	PHONE	FAX	EMAIL
EAPC								
BUILDERS EXCHANGES								
Aberdeen Builders Exchange		302 N. Jackson Street	Aberdeen	SD	57401	605-290-4210		dakotabuild@midconetwork.com
Billings Builders Exchange		2050 Broadwater Avenue	Billings	MT	59102	406-652-1311	406-652-1391	bbx@billingsplanroom.com
Bismarck Builders Exchange		215 Airport Road	Bismarck	ND	58504	701-258-4215	701-258-1391	info@bbxnd.com
Bismarck-Mandan Builders Exchange		P. O. Box 550	Mandan	ND	58554	701-667-4322	701-667-5217	bismanblderex@gmail.com
CMD (Construction Market Data)		Suite 500	Norcross	GA	30092	770-417-4000	800-508-5370	content@constructconnect.com
Construction Industry Center		Box 1227	Rapid City	SD	57709	605-343-5252	605-343-4591	cic@constructionindustrycenter.com or chrissy@constructionindustrycenter.com
Fargo-Moorhead Bldrs. Exchange		P. O. Box 10076	Fargo	ND	58106	701-237-6772	701-232-1653	upload
Grand Forks Builders Exchange		2211 S. Washington St. Ste D	Grand Forks	ND	58201	701-772-7798	701-772-0387	planroom@bntgf.com
McGraw Hill Const./Dodge Plan Rm.		1401 Glenwood Avenue No.	Minneapolis	MN	55405	612-381-2290	612-381-2295	dodge.docs@construction.com
Minnesota Builders Exchange		1123 Glenwood Avenue	Minneapolis	MN	55405	612-381-2620	612-381-2621	new project: jb@mbex.org addendums: addenda@mbex.org
Minot Builders Exchange		2424 Burdick Expy East	Minot	ND	58701	701-838-5353	701-839-0638	mbe1@srt.com
Plains Builders Exchange		220 N. Kiwanis Ave.	Sioux Falls	SD	57104-2530	605-334-8886	605-334-0112	info@plainsbuilders.com
QuestCDN.com								www.questcdn.com
Sioux Falls Builders Exchange		1418 "C" Avenue	Sioux Falls	SD	57104	605-357-8687	605-357-8655	info@sfbx.com
Williston Builders Exchange		2108 - 4th Ave. West	Williston	ND	58801-3423	701-572-9460	701-572-2511	willistonbuildersexchange@gmail.com
CONTRACTOR								
Construction Engineers	Lance Monson	200 N 69th St	Grand Forks	ND	58203	701.792.3207		lancem@constructionengineers.com
Strata Corporation	Rob Martens	1600 N. 48th St.	Grand Forks	ND	58203	701.775.4205		krndsquotes@kniferiver.com
Northstar Steel	Pat Graner	616 37th Ave Sw	Minot	ND	58701	701.852.3744		pat@northstarsteelinc.com
DLC Construction	Lucas Brown	PO Box 370	Minot	ND	58702	701.839.0190		lucasbrown81@yahoo.com
Sentry	Brady Burghardt	1928 Calvin Park Drive	Watertown	SD	57201	605.753.0880		estimating@sentryusa.com
Triangle Electric Inc.	Rob Kjelshus	2644 1st Ave. East	Williston	ND	58801	701.572.6783		rob.kjelshus@triangleelectric.com
Rolac Contracting Inc.	Jason Sanders	PO Box 1872	Minot	ND	58702	701.839.6525		info@rolac-nd.com
First Dakota Enterprises, Inc.	Kyle	PO Box 910	Ft. Pierre	SD	57532	605.223.9600		kyle.mckeever@firstdakotaenterprises.com
Main Electric Construction, Inc.	Lona Jo Thiesen	2626 Valley St	Minot	ND	58702	701.852.3315		lonat@main-holmes.com
Wescom Electrical and Automation	Nelisse Sumey	5137 Jean Duluth Road	Duluth	MN	55803	218.724.1322		Nelisse.Sumey@WescomInc.com
Bainville Construction	Andy Ullmer							AndyUllmer40@gmail.com
ICS, Inc	Shelly Quirk	2500 State Mill Road	Grand Forks	ND	58203	701.775.8480		shelly.quirk@icsgf.us
Corland Construction Llc	Jon Kleinke	1175 Red River Dr	Sidney	MT	59270	406.433.8158		jon@corlandconstruction.com
Al Gleason Construction	Jason Parker					701.262.4488		jason@algleasonconstruction.com
Ackerman Estvold C.M.	Tim Keller	1907 17th St SE	Minot	ND	58701	701.857.9130		tim.keller@aecm-nd.com
SUPPLIER								
Core and Main LP	Heather Schumacher	1830 Craig Park Ct	St. Louis	MO	63146	314.432.4700		heather.schumacher@coreandmain.com
Next Level Excavating						701.705.0151		info@nextlevelnd.com
Joe's Digging Service	Tate Wells	PO Box 452	Williston	ND	58801	701.580.4684		tatewells22@hotmail.com

EAPC ARCHITECTS ENGINEERS

313 Main Street. Suite 200
Williston, ND 58801
Phone: 701-572-6759

SIGN IN SHEET

NAME:	COMPANY:	ADDRESS:	PHONE/EMAIL:
Burton Youngs	EAPC Architects Engineers	313 Main Street, Suite 200 Williston, ND	701-572-6759 burton.youngs@eapc.net
Cameron McKibbon	EAPC Architects Engineers	St. Paul, MN	(612) 552-4627 Cameron.McKibbon@eapc.net
Jerick Hedges	EAPC Architects Engineers	Minot, ND	(701) 839-4547 Jerick.Hedges@eapc.net
Joe Rocha	EAPC Architects Engineers	Fargo, ND	(701) 461-7495 Joe.Rocha@eapc.net
Michael Kangas	NDSU	Fargo, ND	(701 231-5936 Michael.kangas@ndsu.edu
Steve Tinkham	On Point Electric	Minot, ND	Steve.onpointnd@gmail.com (207) 229-4835
Travis Steffen	Industrial Contract Services Inc.		(701) 775-8480 Travis.steffen.icsgf.us
Kyle McKeever	First Dakota Enterprises		(605) 220-2744 kyle.mckeever@firstdakotaenterpsises.com
John Ruiz	AE Construction Management	1907 17th Street SE Minot, ND	(701) 837-8737 John.Ruiz@aecm-nd.com
Chris Link	Agri Industries, Inc.		(701) 651-6524 clink@h2oagri.com
Lance Koski	Westcom Inc.	Alexander, ND	Lance.koski@westcom.com
Lance Monson	Construction Engineers	Grand Forks, ND	(701) 792-3207 lancem@constructionengineers.com
Casey Christofferson	Gleason Construction	Devils Lake, ND	casey@algleasonconstruction.com
Tim Keller	Northstar Steel, Inc.	Minot, ND	
Kip Langei	Industrial Contract Services Inc.	Grand Forks, ND	
Kenny Faul	Gefroh Electric, Inc.	100 45th Ave. NW, Minot, ND	gfelect@srt.com (701) 838-0225
Lucas Brown	DLC Construction, LLC	4415 Burdick Expry E, Minot, ND	(701) 729-8481

NDSU - IRRIGATION RESEARCH & TECHNOLOGY CENTER

5154 112TH AVENUE NW
RAY, NORTH DAKOTA

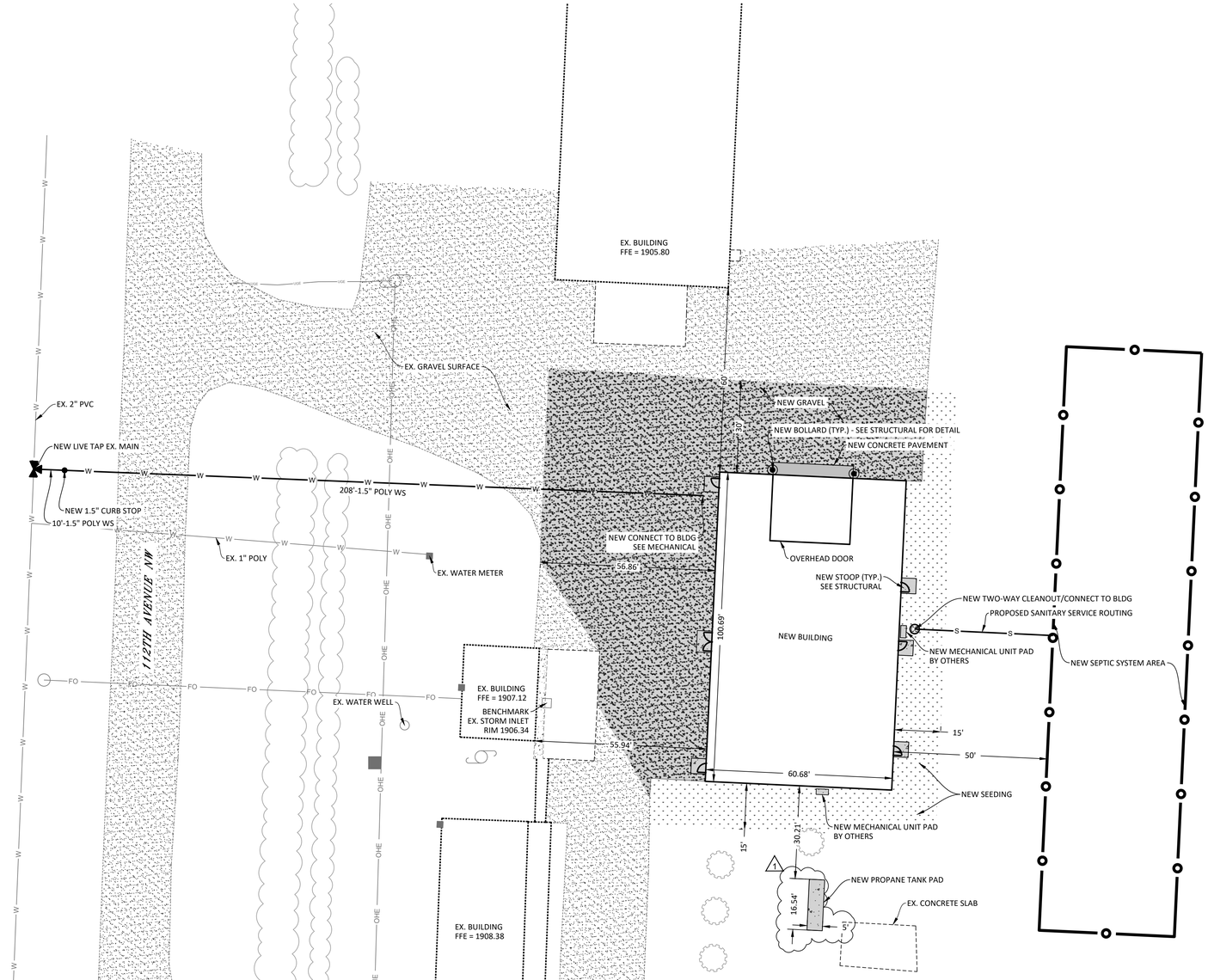

BENCHMARK: TOP OF EXISTING STORM INLET CASTING LOCATED WEST OF LAB BUILDING. ELEVATION = 1906.34

BASIS OF BEARING: NORTH DAKOTA STATE PLANE - NORTH ZONE

SURVEY INFORMATION	
DATE OF SURVEY	11/15/2023
COORDINATE SYSTEM	NAD83 STATE PLANE
DRAWING UNITS	INTERNATIONAL FEET
VERTICAL DATUM	NAVD 88

NOTES:
1. CHANGES TO APPROVED PLANS SHALL NOT BE MADE WITHOUT OWNER'S WRITTEN APPROVAL.
2. CHANGES TO APPROVED PLANS ON PUBLIC PROPERTY SHALL NOT BE MADE WITHOUT WRITTEN APPROVAL FROM THE RESPECTIVE PUBLIC ENTITY.

VICINITY MAP



ESTIMATED SITE QUANTITIES		
ITEM	QUANTITY	UNIT
6" CONCRETE PAVEMENT	12	SY
4" CONCRETE PROPANE PAD	9	SY
BOLLARD	2	EA

ESTIMATED WATER QUANTITIES		
ITEM	QUANTITY	UNIT
1.5" POLY PIPE	218	LF
1.5" CURB STOP	1	EA
LIVE TAP EX. MAIN	1	EA
CONNECTION TO BUIDLING	1	EA

ESTIMATED SANITARY QUANTITIES		
ITEM	QUANTITY	UNIT
SEPTIC SYSTEM	1	LS

NOTES:
1. NEW POLY PIPE SHALL BE 200 PSI SIDR 7 OR APPROVED EQUAL.
2. CONTRACTOR SHALL VERIFY WATER MAIN LOCATION AT CONNECTION POINT PRIOR TO CONSTRUCTION. LOCATION SHOWN BASED ON AS-BUILTS FROM NORTHWEST RURAL WATER DISTRICT.
3. CONTRACTOR SHALL COORDINATE WITH NORTHWEST RURAL WATER DISTRICT FOR ALL WET-TAPPING OPERATIONS.
4. CONTRACTOR SHALL COORDINATE WITH MECHANICAL/PLUMBER FOR CONNECTIONS AT BUILDING.
5. CONTRACTOR SHALL INSTALL WATER LINES WITH A MINIMUM 7.5' OF COVER.
6. CONTRACTOR SHALL TAKE CAUTION WHILE EXCAVATING NEAR OVERHEAD ELECTRIC LINES.
7. CONTRACTOR SHALL COORDINATE FINAL SIZE AND LOCATION OF SEPTIC TANK AND DRAIN FIELD WITH OWNER, TANK AND DRAIN FIELD SHALL BE 50' FROM BUILDING.
8. SEPTIC SYSTEM SHALL BE DESIGN-BUILD BY CONTRACTOR. CONTRACTOR SHALL BE RESPONSIBLE FOR ALL SEPTIC PERMITTING THROUGH UPPER MISSOURI DISTRICT HEALTH UNIT, ETC.
9. IF ALTERNATE 2 IS ACCEPTED, PROPANE TANK PAD SHALL MOVE 10' SOUTH.

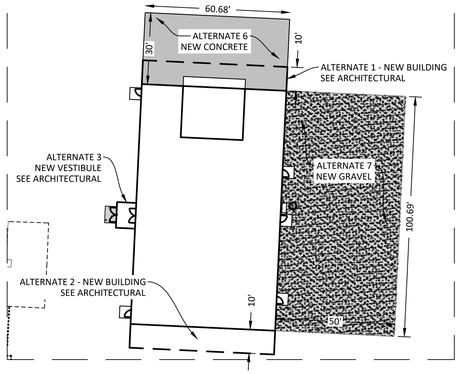

1 ALTERNATES
1" = 30'

ALTERNATE #1 DEDUCTIVE QUANTITIES		
ITEM	QUANTITY	UNIT
GRAVEL SURFACE	-67	SY

ALTERNATE #3 DEDUCTIVE QUANTITIES		
ITEM	QUANTITY	UNIT
GRAVEL SURFACE	-10	SY

ALTERNATE #6 ADDITIONAL QUANTITIES		
ITEM	QUANTITY	UNIT
6" CONCRETE PAVEMENT	191	SY
GRAVEL SURFACE	-191	SY

ALTERNATE #7 ADDITIONAL QUANTITIES		
ITEM	QUANTITY	UNIT
GRAVEL SURFACE	551	SY

SHEET INDEX	
C100	OVERALL SITE & UTILITY PLAN
C200	GENERAL NOTES & LEGEND
C300	SURVEY OVERLAY & DEMOLITION PLAN
C400	GRADING PLAN
C500	EROSION & SEDIMENT CONTROL PLAN
C600	TYPICAL DETAILS

1 ADDENDUM #2
- ADDED PROPANE TANK PAD DIMENSIONS

N
0 20 40

CALL BEFORE YOU DIG
NORTH DAKOTA
UTILITIES UNDERGROUND LOCATION SERVICE
1-800-795-0555

EAPC
Architecture | Engineering | Industrial
Wind Energy | Interior Design | Construction
TELE 701.572.6759 FAX 701.772.3605
313 Main Street, Suite 200, Williston ND 58801
Grand Forks ND | Fargo ND | Bismarck ND
Williston ND | Minot ND | Norwich VT
Bemidji MN | Buenos Aires ARG | Sioux Falls, SD
St. Paul MN | Fort Collins CO | Phoenix AZ
www.eapc.net

LOWRY ENGINEERING
5306 51ST AVENUE SOUTH, SUITE A
FARGO, NORTH DAKOTA 58104

CLIENT
NDSU AG. SERVICE

PROJECT DESCRIPTION
NDSU IRRIGATION RESEARCH & TECHNOLOGY TRANSFER CENTER

CITY RAY
STATE ND

ISSUE DATES

REGISTERED PROFESSIONAL ENGINEER
JONATHAN M. LOWRY
PE-7442
DATE: 11/19/26
NORTH DAKOTA

MARK	DESCRIPTION	DATE
ADD 2	ADDENDUM 2	11/19/2026
CD	CONSTRUCTION DOCUMENTS	11/02/2026

PROJECT NO: 20236271/23191
DRAWN BY: TWT
CHECKED BY: JML

COPYRIGHT:
All plans, specifications, computer files, field data, notes and other documents and instruments prepared by EAPC as instruments of service shall remain the property of EAPC. EAPC shall retain all common law, statutory and other reserved rights, including the copyright thereto.

DRAWING TITLE
OVERALL SITE & UTILITY PLAN

C100

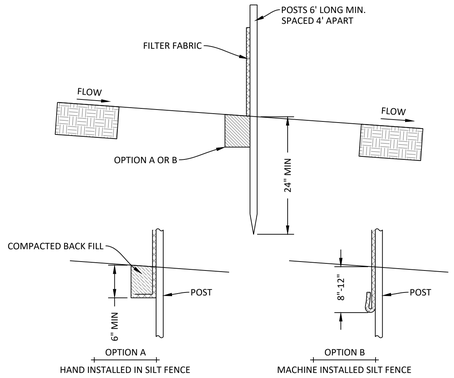

NOTES:
1. POSTS SHALL BE 2 INCH DIAMETER ROUND WOOD, 1.5 INCH RECTANGULAR WOOD, OR STEEL WITH A MINIMUM OF 0.95 POUNDS PER FOOT AND HAVE PROJECTIONS FOR FASTENING WIRE OR FABRIC.
2. FILTER FABRIC SHALL BE AS SPECIFIED IN AASHTO M 288 WITH A MINIMUM WIDTH OF 36 INCHES.
3. SILT FENCE SHALL BE INSTALLED ALONG THE CONTOURS OF THE SITE SO WATER CANNOT FLOW AROUND THE END OF THE FENCE.
4. IF JOINING TWO SECTION OF FILTER FABRIC, OVERLAP AT SUPPORT POSTS A MINIMUM OF 18 INCHES IN SUCH A MANNER THAT PREVENTS SILT FROM PASSING THROUGH THE FENCE.
5. REMOVE SEDIMENT FROM SILT FENCE WHEN IT REACHES ½ OF THE EXPOSED HEIGHT OF ANY SECTION, OR AS DIRECTED BY THE ENGINEER. THE ENGINEER MAY DIRECT THE INSTALLATION OF ADDITIONAL SILT FENCE IF REMOVING THE SEDIMENT DEPOSIT IS NOT FEASIBLE.

1 SILT FENCE INSTALLATION
N.T.S.

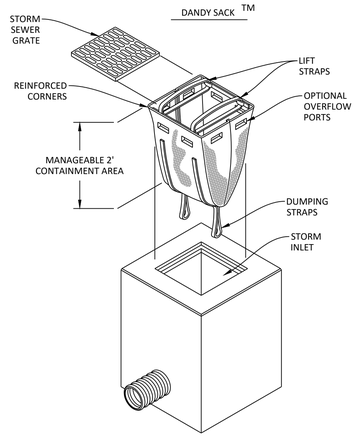

NOTES:
1. INSTALL AND MAINTAIN PER MANUFACTURES SPECIFICATIONS.

2 INLET PROTECTION: DANDY SACK
N.T.S.

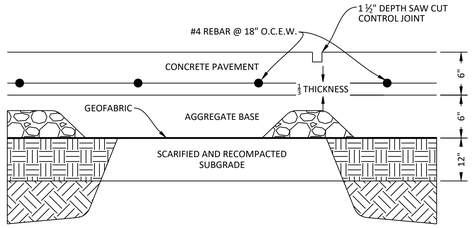

NOTES:
1. PROVIDE SAWCUT CONTROL JOINTS AT 12' MAXIMUM SPACING EACH WAY.
2. PROVIDE 18" EPOXY COATED #4 REBAR @ 24" O.C. AT CONNECTION TO CURB & GUTTER, THICKENED EDGE SIDEWALK, EXISTING CONCRETE, AND CONSTRUCTION JOINTS.
3. WHITE CONCRETE CURING COMPOUND SHALL BE APPLIED PER MANUFACTURERS INSTRUCTIONS ON ALL EXTERIOR CONCRETE SURFACES.
4. PROVIDE ½" EXPANSION MATERIAL ADJACENT TO BUILDINGS AND ANY OTHER FIXED OBJECTS SUCH AS LIGHT POLE BASES, SIGN FOUNDATIONS, ETC. AND AT CONNECTIONS TO EXISTING CONCRETE.
5. NDDOT TYPE R1 FABRIC SHALL BE PLACED UNDER AGGREGATE BASE PER NDDOT SPECIFICATIONS.
6. REBAR SHALL BE SUPPORTED BY CHAIRS.
7. CONCRETE FOR STREETS SHALL BE 5,000 PSI MINIMUM AT 28-DAYS AND MEET NDSU SPECIFICATIONS.

3 REINFORCED CONCRETE CROSS SECTION
N.T.S.

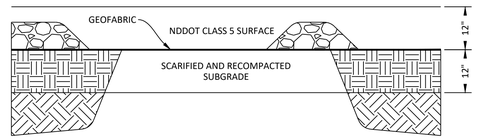

4 GRAVEL CROSS SECTION
N.T.S.

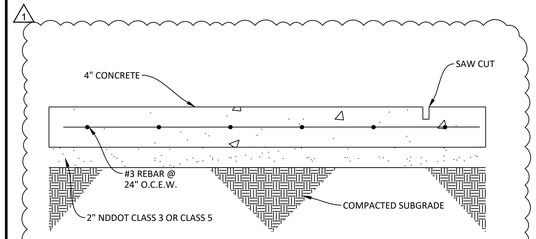

NOTES:
1. SAW CUT 1.25" DEEP AT 6' INTERVALS OR LESS TO APPROXIMATE SQUARE DESIGN.
2. PROVIDE ¾" x 18" SMOOTH DOWELS AT 12" O.C. AT CONSTRUCTION JOINTS.
3. CONCRETE SHALL BE 4,000 OR HIGHER PSI AND MEET NDDOT SPECIFICATIONS.
4. CLASS 3 OR 5 BEDDING MATERIAL SHALL BE CONSIDERED INCIDENTAL TO THE BID PRICE FOR SIDEWALK.

5 PROPANE PAD CROSS SECTION
N.T.S.

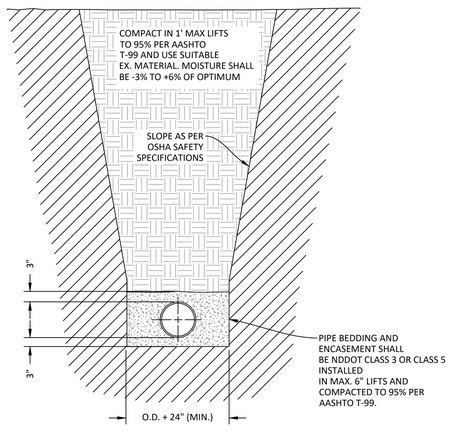

NOTE:
1. CONTRACTOR SHALL INSTALL RIBBON 18" ABOVE TOP OF CENTER OF PIPE.

6 WATER MAIN TRENCH DETAIL
N.T.S.

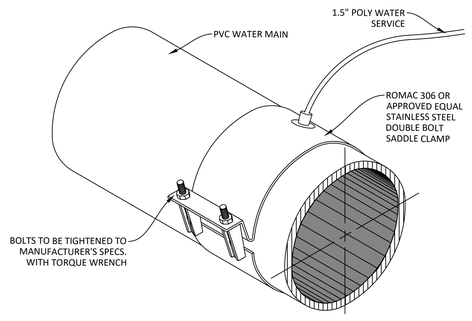

7 WATER MAIN TAPPING SADDLE
N.T.S.

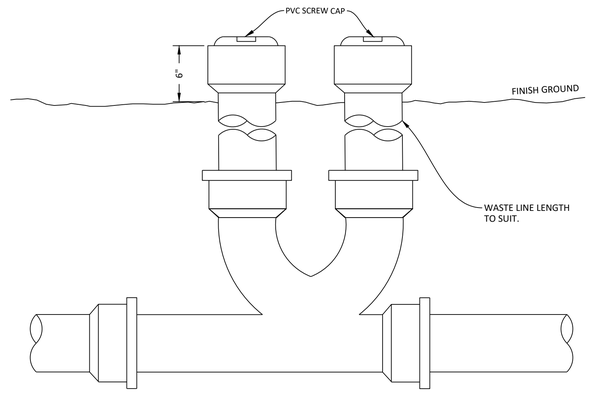

8 TWO-WAY CLEANOUT (GRASS OR LANDSCAPE AREA)
NTS

1 ADDENDUM #2
- ADDED PROPANE TANK PAD DETAIL

EAPC
Architecture | Engineering | Industrial
Wind Energy | Interior Design | Construction
TELE 701.572.6759 FAX 701.772.3605
313 Main Street, Suite 200, Williston ND 58801
Grand Forks ND, Williston ND, Bemidji MN, St. Paul MN
Fargo ND, Minot ND, Buenos Aires ARG, Fort Collins CO
Bismarck ND, Norwich VT, Sioux Falls SD, Phoenix AZ
www.eapc.net

LOWRY ENGINEERING
5306 51ST AVENUE SOUTH, SUITE A
FARGO, NORTH DAKOTA 58104

CLIENT
NDSU AG. SERVICE

PROJECT DESCRIPTION
NDSU IRRIGATION RESEARCH & TECHNOLOGY TRANSFER CENTER

CITY RAY
STATE ND

ISSUE DATES

REGISTERED PROFESSIONAL ENGINEER
JONATHAN M. LOWRY
PE-7442
DATE: 11/19/26
NORTH DAKOTA

ADD 2	ADDENDUM 2	11/19/2026
CD	CONSTRUCTION DOCUMENTS	11/02/2026
MARK	DESCRIPTION	DATE

PROJECT NO: 20236271/23191
DRAWN BY: TWT
CHECKED BY: JML

COPYRIGHT:
All plans, specifications, computer files, field data, notes and other documents and instruments prepared by EAPC as instruments of service shall remain the property of EAPC. EAPC shall retain all common law, statutory and other reserved rights, including the copyright thereto.

DRAWING TITLE
DETAILS

C600

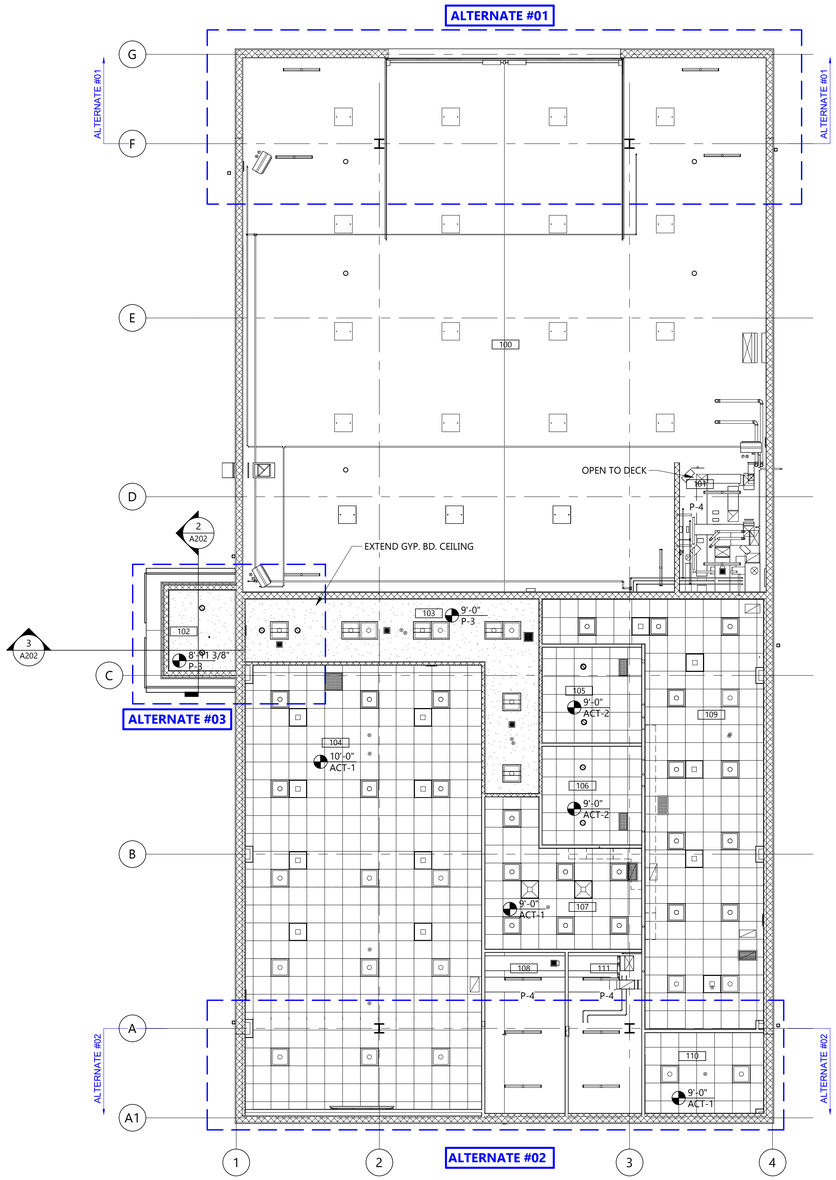

2 A301 FIRST FLOOR REFLECTED CEILING PLAN - ALTERNATES

1/8" = 1'-0"

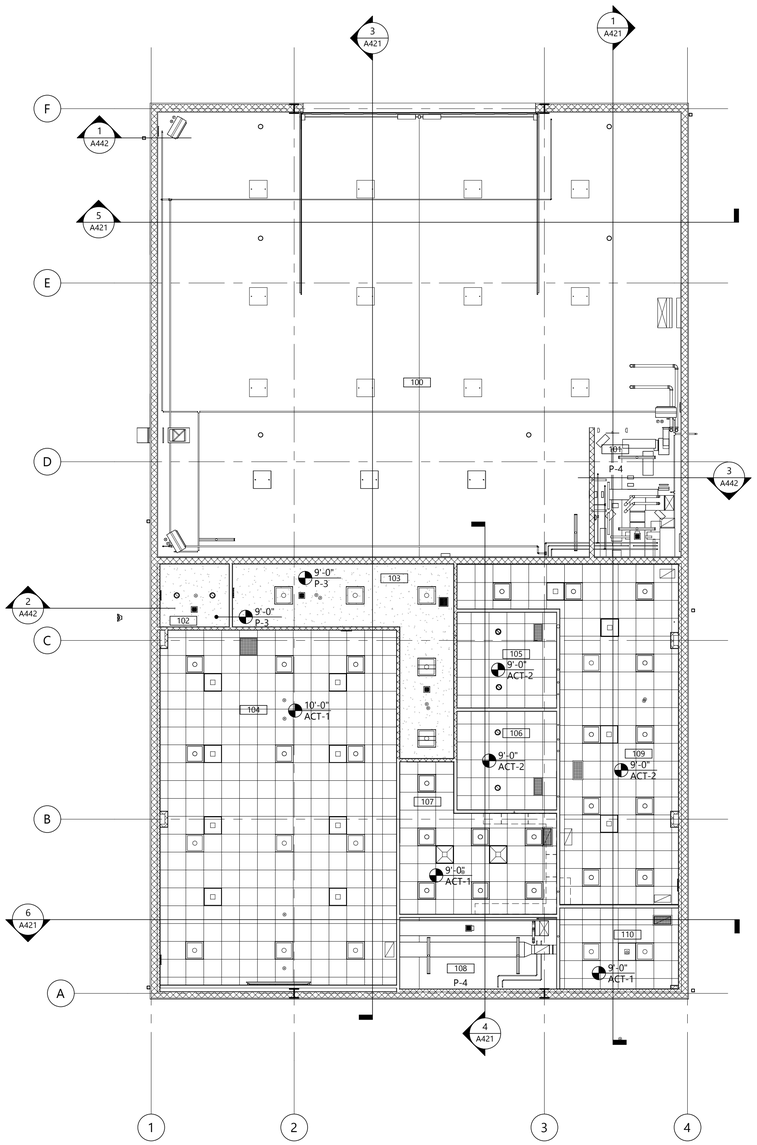

1 A301 FIRST FLOOR REFLECTED CEILING PLAN - BASE BID

1/8" = 1'-0"

CEILING PLAN SYMBOLS

AIR DISTRIBUTION SYMBOLS	TYPICAL SUSPENDED CEILING GRID
DIFFUSER SUPPLY	24" x 24" GRID SHOWN
DIFFUSER RETURN	GYPSUM WALL BOARD OR PLASTER
ACCESS PANEL	
SLOT OR LINEAR DIFFUSER OR RETURN	
MISCELLANEOUS	
PUBLIC ADDRESS OR AS SHOWN	LIGHT FIXTURES
SMOKE DETECTOR	BAY LIGHT
OCCUPANCY CENSOR	2x2 LAY-IN
WALL HEIGHT	STRIP LIGHT
WALL TO EXTEND FULL HEIGHT TO STRUCTURE ABOVE	RECESSED INCANDESCENT
GWB TO EXTEND 6" ABOVE CEILING HEIGHT	EXIT LIGHT

GENERAL CEILING NOTES

1. PROVIDE GYPSUM WALL BOARD AND STUD BULK HEADS WHERE CEILINGS OF DIFFERENT HEIGHTS ABUT. DO NOT BUILD BULKHEADS OF ACOUSTICAL CEILING MATERIALS UNLESS SPECIFICALLY DETAILED.
2. REFER TO MECHANICAL DRAWINGS FOR QUANTITY AND TYPE OF DIFFUSERS, RETURN GRILLES AND EXHAUST GRILLES, ETC. SCRIBE CEILING MATERIALS FOR A TIGHT FIT.
3. REFER TO ELECTRICAL DRAWINGS FOR QUANTITY AND TYPE OF LIGHTS, SPEAKERS, DETECTORS, POWER OUTLETS, ETC. SCRIBE CEILING MATERIALS FOR A TIGHT FIT. WHERE DEVICES ARE NOT SHOWN ON PLAN, FIELD VERIFY LOCATION AND QUANTITY PRIOR TO REMOVAL. THESE DEVICES WILL BE RELOCATED INTO NEW PLAN.
4. WHERE CEILINGS ARE INDICATED TO BE EXPOSED TO STRUCTURE, PAINT ALL UNFINISHED MATERIALS OVERHEAD. INCLUDING, BUT NOT LIMITED TO; ROOF DECKING, JOISTS, DUCTS, PIPING, CONDUIT, ETC. SEE FINISHES SHEET FOR PAINT.
5. GENERAL CONTRACTOR TO COORDINATE CEILING MOUNTED EQUIPMENT SUPPORT REQUIREMENTS, LOCATIONS, DIMENSIONS, ETC. WITH EQUIPMENT SUPPLER AND OWNER PRIOR TO INSTALLATION.
6. CEILING MOUNTED ITEMS SUCH AS LIGHT FIXTURES, GRILLES, DIFFUSERS, SPEAKERS, EXIT LIGHTS, ETC. SHALL BE LOCATED IN THE CENTER OF CEILING PANELS, GYPSUM BOARD SOFFITS, AND/OR PLASTER SOFFIT BAYS UNLESS NOTED OTHERWISE. COORDINATE WITH MECHANICAL AND ELECTRICAL DRAWINGS.
7. FINISHED GYPSUM BOARD SOFFITS SHALL EXTEND 1" BEYOND FACE AND EXPOSED ENDS OF WALL CABINETS, FULL-HEIGHT CABINETS, ETC. UNLESS NOTED OTHERWISE. COORDINATE CABINET DIMENSIONS WITH SUPPLIER GYPSUM BOARD FASCIA/SOFFIT DETAILS ARE REFERENCED FROM THE REFLECTED CEILING PLAN.
8. VERTICAL FACE OF SOFFITS THAT ALIGN WITH WALL TO RECEIVE ADJACENT WALL FINISH UNLESS NOTED OTHERWISE.
9. UNISTRUT TO BE DESIGN BUILD. COORDINATE CLOSELY WITH EQUIPMENT DRAWINGS FOR LOCATIONS OF ALL LIGHTS AND BOOMS.
10. ACCESS PANELS SIZE, LOCATION AND QUANTITY TO BE COORDINATED WITH MECHANICAL. PAINT METAL CEILING ACCESS PANELS WHERE EXPOSED TO VIEW TO MATCH ADJACENT CEILING FINISH, UNO.
11. LEAVE ONSITE (10) ADDITIONAL CEILING TILES TO MATCH CEILING PAINT COLOR FOR FUTURE USE.
12. PROVIDE GROMMET AT ACOUSTIC CEILING TILE PENETRATIONS FOR FIXTURES OR SUPPORTS.

KEYNOTE LEGEND:

< < < INDICATES KEYNOTE ON PLAN

EAPC
Architecture | Engineering
Interior Design | Industrial
TELEPHONE 701.609.5290
313 Main Street, Suite 200, Williston ND 58801
www.eapc.net

CLIENT
NDSU AG. SERVICE CENTER

PROJECT DESCRIPTION
NDSU IRRIGATION RESEARCH & TECHNOLOGY TRANSFER CENTER

CITY RAY
STATE NORTH DAKOTA

ISSUE DATES

MARK	DESCRIPTION	DATE
CD	CONSTRUCTION DOCUMENTS	11/02/2026

PROJECT NO: 20236271
DRAWN BY: BEY
CHECKED BY: GL

COPYRIGHT:
All plans, specifications, computer files, field data, notes and other documents and instruments prepared by EAPC as instruments of service shall remain the property of EAPC. EAPC shall retain all common law, statutory and other reserved rights, including the copyright there to.

STAMP

I hereby certify that this plan, specification, or report was prepared by me or under my direct supervision and that I am a duly Registered Architect under the laws of the State of North Dakota.
Signature: Burton E. Young
Date: 11/02/2026 REG. NO. : 1132

DRAWING TITLE
FIRST FLOOR REFLECTED CEILING PLAN

A301

Revit Version: 2025
Plot Date: 11/16/2026 11:19:28 AM

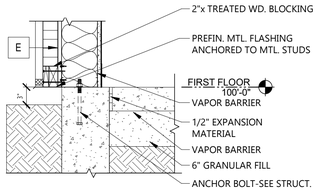

7 A441 **WALL BASE DETAIL**
1" = 1'-0"

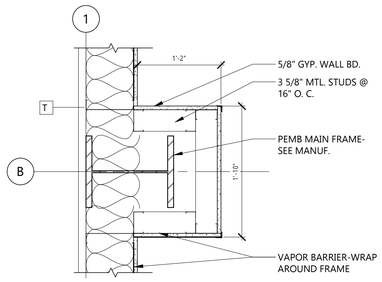

8 A441 **COLUMN COVER DETAIL**
1" = 1'-0"

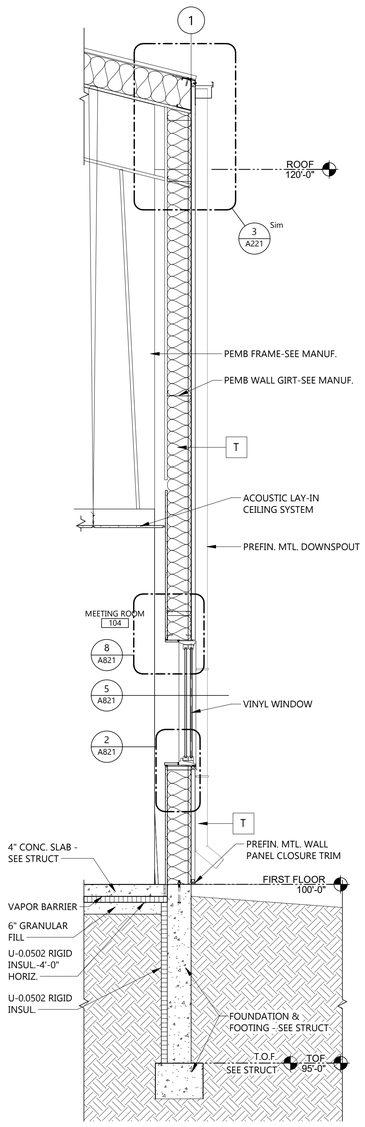

6 A441 **WALL SECTION**
1/2" = 1'-0"

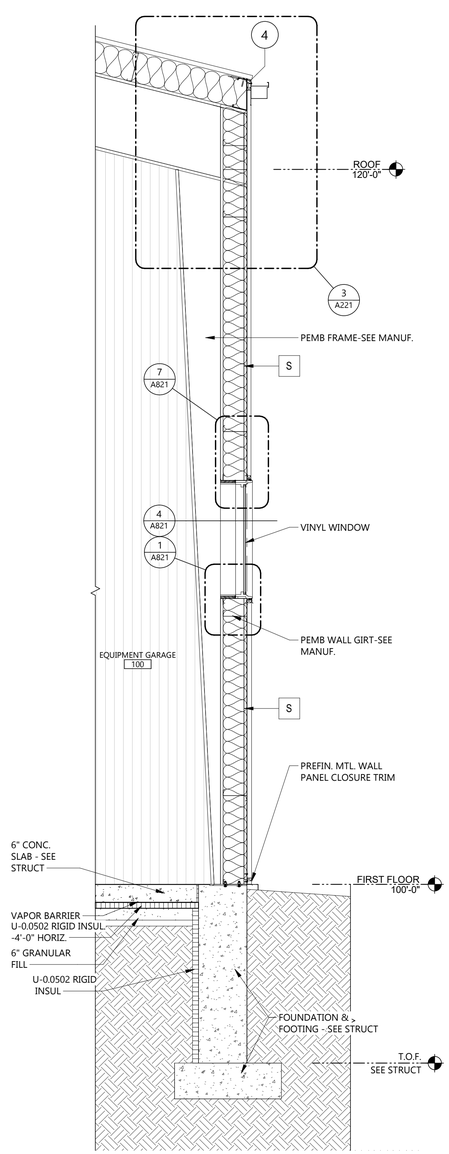

5 A441 **WALL SECTION**
1/2" = 1'-0"

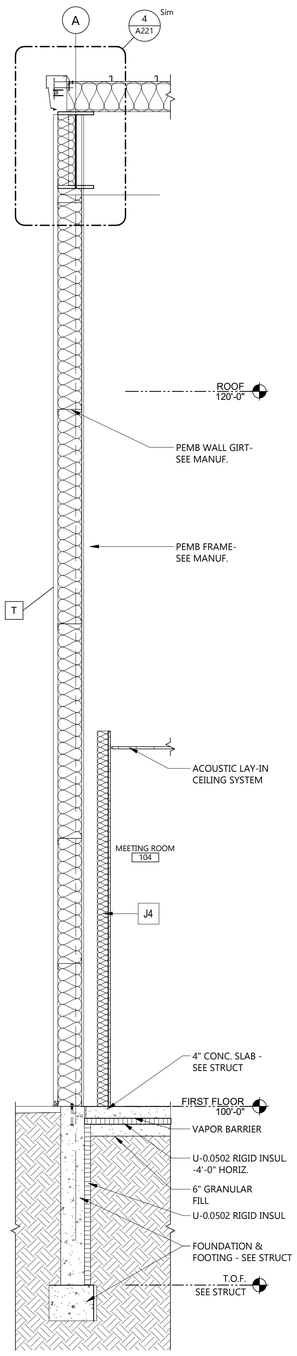

4 A441 **WALL SECTION**
1/2" = 1'-0"

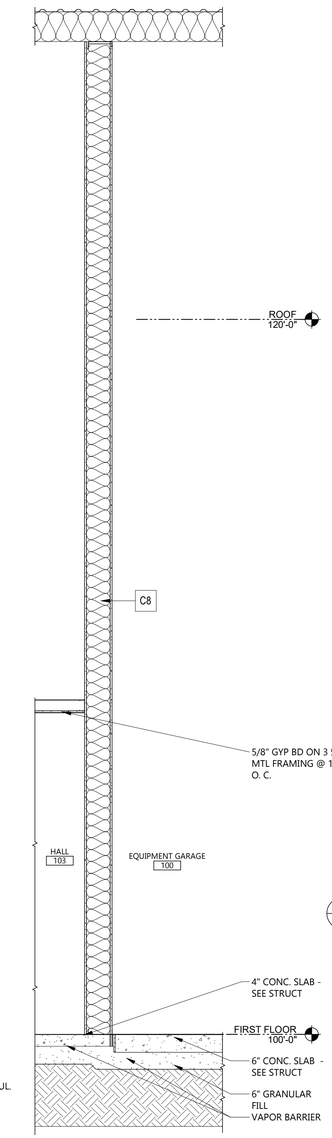

3 A441 **WALL SECTION**
1/2" = 1'-0"

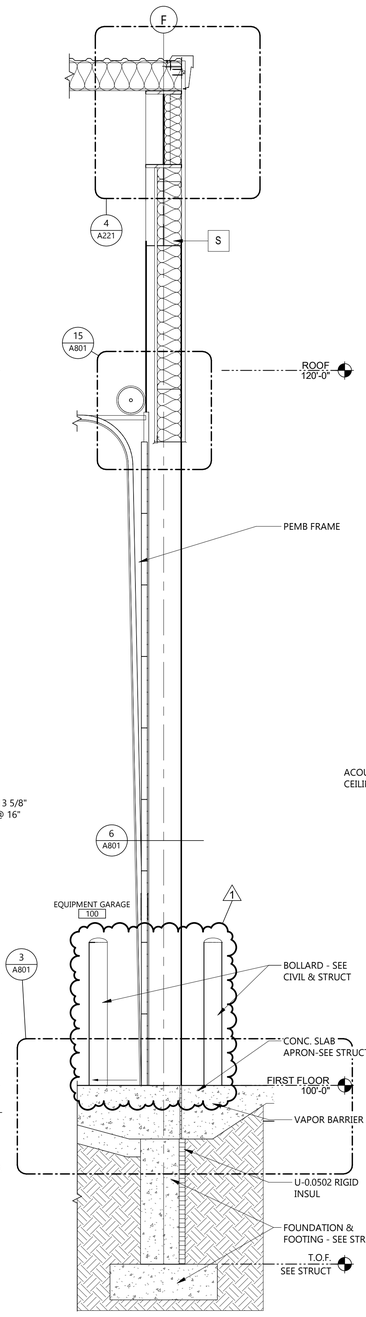

2 A441 **WALL SECTION**
1/2" = 1'-0"

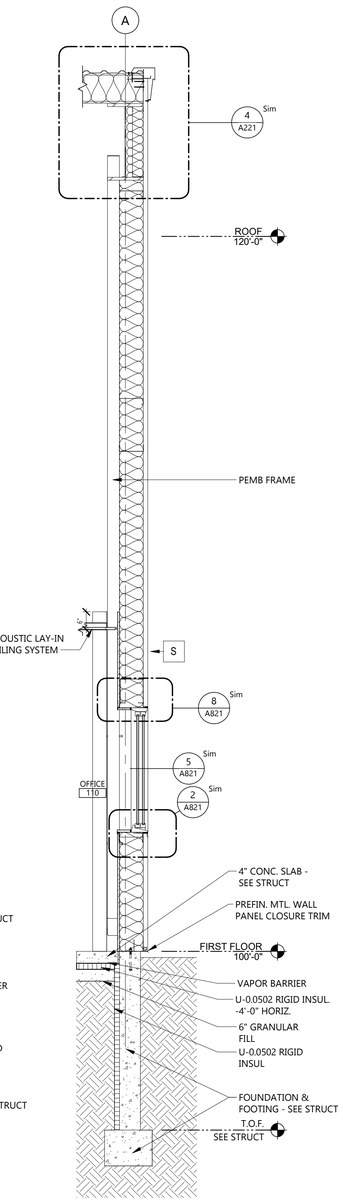

1 A441 **WALL SECTION**
1/2" = 1'-0"

Revit Version: 2025
Plot Date: 11/10/2026 10:39:35 AM

EAPC
Architecture | Engineering
Interior Design | Industrial
TELEPHONE 701.609.5290
313 Main Street, Suite 200, Williston ND 58801
www.eapc.net

CLIENT
NDSU AG. SERVICE CENTER

PROJECT DESCRIPTION
NDSU IRRIGATION RESEARCH & TECHNOLOGY TRANSFER CENTER

CITY RAY
STATE NORTH DAKOTA

ISSUE DATES

1	ADDENDUM 1	11/12/2026
CD	CONSTRUCTION DOCUMENTS	11/02/2026
MARK	DESCRIPTION	DATE

PROJECT NO: 20236271
DRAWN BY: BEY
CHECKED BY: GL

COPYRIGHT:
All plans, specifications, computer files, field data, notes and other documents and instruments prepared by EAPC as instruments of service shall remain the property of EAPC. EAPC shall retain all common law, statutory and other reserved rights, including the copyright there to.

STAMP

I hereby certify that this plan, specification, or report was prepared by me or under my direct supervision and that I am a duly Registered Architect under the laws of the State of North Dakota.
Signature: Burton E. Young
Date: 11/02/2026 REG. NO. 1132

DRAWING TITLE
WALL SECTIONS

A441

PLUMBING FIXTURE SCHEDULE

ITEM NO.	MANUFACTURER	MODEL NO.	DESCRIPTION	CONNECTIONS - INCHES WASTE	VENT	CW	HW	REMARKS
CO	ZURN	Z1400	CAST IRON BODY, ADJUSTABLE COLLAR, NICKEL BRONZE TOP, ABS TAPERED PLUG	VARIES				SEE PLANS FOR PIPE SIZES
MB-1	MUSTEE ZURN	63M Z843M1	FLOOR SET, MOLDED STONE, STAINLESS STEEL WALL GUARDS VINYL BUMPER GUARDS, 30" HOSE & BRACKET CHROME PLATED FAUCET WITH INTEGRAL VACUUM BREAKER PAIL HOOK, WALL BRACE, 3/4" THREADED OUTLET	3"	2"	 3/4"	 3/4"	MOP HOLDER, FLAT STAINLESS STEEL STRAINER
EWC-1	ELKAY	LZWSM8K	IN-WALL BOTTLE FILLING STATION W/ MOUNTING FRAME. CHILLING CAPACITY OF 8 GPH. SENSOR ACTIVATED BOTTLE FILLING	2"	1-1/2"	1/2"		MEETS ADA REQUIREMENTS. LESS FILTER.
FD-1	ZURN	Z415B	CAST IRON BODY, ADJUSTABLE COLLAR, NICKEL BRONZE ROUND STRAINER	2"	2"			RESTROOMS PROVIDE DEEP SEAL P-TRAP
FD-2	ZURN	Z415I	CAST IRON BODY, ADJUSTABLE COLLAR, NICKEL BRONZE ROUND STRAINER, INSTALL WITH RECESS FLUSH WITH FLOOR	2"	2"			MECHANICAL ROOM PROVIDE DEEP SEAL P-TRAP
HB-1	WOODFORD	V26	CHROME WALL FAUCET WITH INTEGRAL VACUUM BREAKER - TOP MOUNT INLET			3/4"		3/4" THREADED OUTLET
L-1	AMERICAN STANDARD CHICAGO WATTS TRUEBRO	LUCERNE 0355.012 420-T41E2805ABCP LFUSB-G LAVSHIELD	WALL HUNG, VITREOUS CHINA, FRONT OVERFLOW, HOLES 4" CENTER, CONCEALED ARM SUPPORT, CHAIR CARRIER, BRASS P-TRAP MANUAL OPERATED, 4" CENTER HOLES, CHROME PLATED, PROVIDE WITH FACTORY SPECIFIED ASSE 1070 THERMOSTATIC MIXING VALVE, LEAD FREE BRASS BODY DRAIN, CW & HW PIPE COVERS, STAIN RESISTANT PVC, WHITE COLOR	2"	1-1/2"	 1/2"	 1/2"	REFER TO ARCH PLANS FOR MOUNTING HEIGHTS 0.5 GPM NON-AERATING LAMINAR FLOW
S-1	MUSTEE CHICAGO	FL-1 891-317ABCP	SINGLE COMPARTMENT, FLOOR MOUNTED, MOLDED STONE, 13" DEEP, RUBBER DRAIN STOP, WHITE BAKED ENAMEL LEGS CHROME PLATED 6" SWIVEL SPOUT ON 4" CENTERS W/ WRISTBLADES. DECK MOUNTED. 2.2 GPM AERATOR.	2"	2"	 3/4"	 3/4"	
S-2	ELKAY ELKAY	ECTSRAD33226TBG LKAV2061	DOUBLE COMPARTMENT, 16 GAUGE, STAINLESS STEEL, DUAL MOUNT, REAR CENTER SET DRAIN STRAINER, COVER CAP, BOTTOM GRID, 33"x22"x6" BOWL SINGLE CONTROL MIXING FAUCET W/ GOOSENECK SPOUT CHROME PLATED CAST BRASS P-TRAP	2"	1-1/2"	 1/2"	 1/2"	UNDERCOATING & SOUND DAMPENING PADS CHROME, 1.8 GPM LAMINAR FLOW
S-3	ELKAY SPEAKMAN	LRAD252255 SEF-1800-CA	DROP-IN, 304 STAINLESS STEEL, LUSTROUS SATIN, 18 GAUGE, SINGLE BOWL REAR CENTER DRAIN, BOTTOM ONLY PADS, 25"x22"x5 1/2" INDEPENDENT WATER CHANNEL FOR EYEWASH, PULL HANDLE ACTIVATION, FLIP TOP DUST CAPS, BRASS CONSTRUCTION W/ POLISHED CHROME FINISH	2"	2"	 3/4"	 3/4"	PROVIDE AND INSTALL UNDER BID ALTERNATE #5 ONLY 2.8 GPM FOR EYEWASH. INSTALL WITH STW-370 MIXING VALVE 2.2 GPM FOR FAUCET
CB-1	ZURN	Z887-24	24"x24"x24" HDPE CATCH BASIN, DUCTILE IRON CLASS F GRATE	4"	3"			PROVIDE WITH BLACK, ACID RESISTANT COATING
U-1	AMERICAN STANDARD AMERICAN STANDARD	6550.001 6045.101.002	WALL HUNG URINAL, TOP SPUD, VITREOUS CHINA, CARRIER, TOP SPUD MANUAL OPERATED FLUSH VALVE, 1.0 GPF, CHROME PLATED	2"	1-1/2"	 3/4"		REFER TO ARCH PLANS FOR MOUNTING HEIGHTS
WC-1	AMERICAN STANDARD OLSONITE	2467.016 10CT	FLOOR MOUNT WATER CLOSET, FLUSH TANK W/ PRESSURE ASSIST SIPHON, VITREOUS CHINA ELONGATED BOWL, CHINA BOLT CAPS WITH RETAINERS ELONGATED, OPEN FRONT,STA-TITE CHECK HINGE	4"	2"	1/2"		ADA HEIGHT FLUSH TANK HANDLE TO WIDE SIDE OF ROOM SEAT SHALL BE WHITE, SOLID PLASTIC
WCO	ZURN	Z1446	CAST IRON BODY, ADJUSTABLE COLLAR, ABS TAPERED	VARIES				SEE PLANS FOR PIPE SIZES
HYD-1	WOODFORD	67	AUTOMATIC DRAINING, FREEZELESS WALL HYDRANT WITH DUAL CHECK BACKFLOW PREVENTER			3/4"		LOOSE KEY OPERATES HYDRANT

NOTES:
1 PROVIDE COLD AND HOT WATER SCREWDRIVER STOPS AT ALL SINKS, LAVATORIES, ELECTRIC WATER COOLERS, ETC.
2 PROVIDE ESCUTCHEONS AT ALL WASTE AND WATER SUPPLIES AT EACH FIXTURE. ESCUTCHEONS SHALL COMPLETELY COVER WALL OPENING.
3 PROVIDE CLEANOUT AT ALL SINKS BELOW P-TRAP.

DOMESTIC WATER BALANCING VALVE SCHEDULE

ITEM NUMBER	MANUFACTURER	MODEL # /1	SERVICE	CONNECTION SIZE	INLET TEMP	OUTLET TEMP	NOTES:
CS-1	CIRCUIT SOLVER	CSUAS-1/2-110	DOMESTIC HOT WATER	1/2"	120°F	110°F	1, 2

1. ANSI-61 RATED
2. PROVIDE SUITABLE LINE SIZE ISOLATION VALVES, UNIONS AND STRAINER AS INDICATED BY MANUFACTURERS REQUIREMENTS & PER DETAIL ON DRAWINGS.

PLUMBING INTERCEPTOR SCHEDULE

ITEM NUMBER	MANUFACTURER	MODEL #	DESCRIPTION	CUBIC FEET	LIQUID CAPACITY	SOLIDS CAPACITY	INLET SIZE (IN)	OUTLET SIZE (IN)	VENT SIZE (IN)	LENGTH (IN)	WIDTH (IN)	HEIGHT (IN)	WEIGHT (LBS)	NOTES:
SOI-1	STRIEM	OS-100	250 GALLON TANK, FLAMMABLE LIQUID CAPACITY = 95 GALLONS, SOLID CAPACITY = 62.5 GALLONS OIL CAPACITY	33.4	250 GAL	95 GAL	4	4	3	68	33	51-1/2	345	1, 2, 3, 4

1. SEAMLESS MOLDED POLYETHYLENE BODY.
2. PROVIDE WITH H20 RATED PICKABLE CAST IRON COVERS. CLEAN ALL RUST OFF COVERS BEFORE INSTALLATION.
3. TANK MUST COMPLY WITH STATE AND LOCAL CODE REQUIREMENTS. INSTALL PER MANUFACTURER'S RECOMMENDATIONS. REFER TO TANK INSTALLATION MANUAL.
4. PROVIDE WITH FIELD ADJUSTABLE RISER KIT. CONTRACTOR TO VERIFY EXACT HEIGHTS REQUIRED.

WATER HEATER SCHEDULE

ITEM NUMBER	MANUFACTURER	MODEL #	LOCATION	KW	CAPACITY (GALLONS)	GPH RECOVERY 40° TO 140°	VOLTS/ PHASE	COMMENTS
WH-1	AO SMITH	DRE-52-12	MECHANICAL ROOM	12.3	50	50	240 / 1	1, 2

1. PROVIDE WITH BELL & GOSSETT MODEL PT-5 2 GALLON EXPANSION TANK, 0.9 GALLON ACCEPTANCE VOLUME.
2. PIPE RELIEF VALVES OVER FLOOR DRAIN.

MIXING VALVE SCHEDULE

ITEM NUMBER	MANUFACTURER	MODEL #	LOCATION	CW INLET	HW INLET	HW OUTLET	PRESSURE DROP (PSI)	GPM FLOW	COMMENTS
MV-1	LAWLER	61-25	MECH RM 110	40 DEG. F	140 DEG. F.	120 DEG. F	5	6	1, 2

1. PROVIDE SHUT-OFF VALVES ON INLETS & OUTELTS.
2. THERMOSTATIC BRONZE MIXING VALVE SHALL BE LIQUID FILLED MOTOR, PISTON & LINER SHALL BE STAINLESS STEEL, UNION END STOPS, CHECK VALVE INLETS, STAINLESS STEEL STRAINERS, TEMPERATURE GAUGE, ASME 1017.

PLUMBING PUMP SCHEDULE

NUMBER	SERVICE	MFGR.	MODEL	PUMP TYPE	GPM	TOTAL HEAD	MOTOR CHARACTERISTICS RPM	HP	V / PH	NOTES:
RCP-1	DOMESTIC WATER CIRCULATOR	BELL & GOSSETT	PL-36	INLINE	1	2	3,300	1/6	120 / 1	1, 2, 3, 4

1. ITT BELL & GOSSET 100% LEAD-FREE BRONZE PUMP
2. INSTALL WITH ISOLATION VALVES & UNIONS AS REQUIRED FOR PUMP MAINTANENCE.
3. PROVIDE AQUASTAT AND TIMER
4. PUMP SHALL BE SUITABLE FOR DOMESTIC POTABLE HOT WATER AND SHALL BE PROVIDED WITH A DISCONNECT SWITCH.

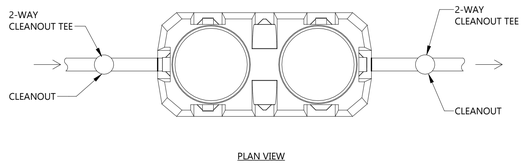

PLAN VIEW

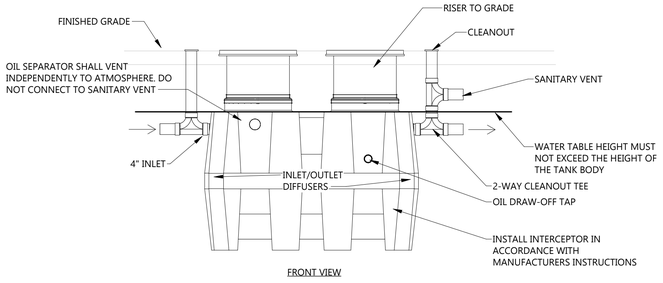

FRONT VIEW

7 P801 SAND/OIL INTERCEPTOR
NOT TO SCALE

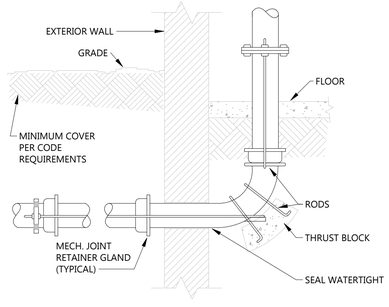

4 P801 WATER SERVICE DETAIL
NOT TO SCALE

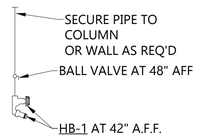

6 P801 HB-1 DETAIL
NOT TO SCALE

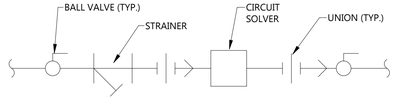

5 P801 CIRCUIT SOLVER ASSEMBLY DETAIL
NOT TO SCALE

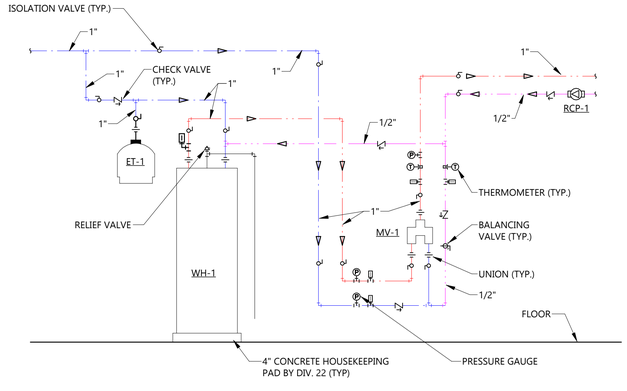

2 P801 WATER HEATER PIPING DETAIL
NOT TO SCALE

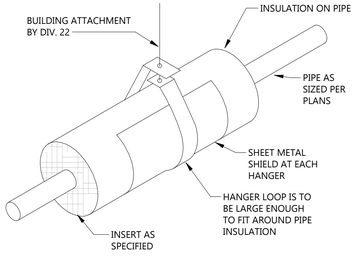

3 P801 TYPICAL PIPE HANGER DETAIL
NOT TO SCALE

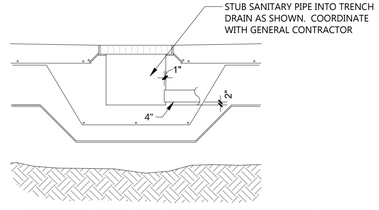

1 P801 CATCH BASIN CONNECTION DETAIL
NOT TO SCALE

EAPC
Architecture | Engineering
Interior Design | Industrial
TELEPHONE 701.609.5290
313 Main Street, Suite 200, Williston ND 58801
www.eapc.net

CLIENT
NDSU AG. SERVICE CENTER

PROJECT DESCRIPTION
NDSU IRRIGATION RESEARCH & TECHNOLOGY TRANSFER CENTER

CITY RAY
STATE NORTH DAKOTA

ISSUE DATES

1	ADDNEDUM 02	11/19/2026
CD	CONSTRUCTION DOCUMENTS	11/02/2026
MARK	DESCRIPTION	DATE

PROJECT NO: 20236271
DRAWN BY: CL
CHECKED BY: JH

COPYRIGHT:
All plans, specifications, computer files, field data, notes and other documents and instruments prepared by EAPC as instruments of service shall remain the property of EAPC. EAPC shall retain all common law, statutory and other reserved rights, including the copyright there to.

STAMP

REGISTERED PROFESSIONAL ENGINEER
JERICK A. HEDGES
PE-29087
NORTH DAKOTA
DATE: 11/19/2026

DRAWING TITLE
PLUMBING SCHEDULES & DETAILS

P801

Revit Version: 2022
Plot Date: 11/20/2026 7:26:03 AM

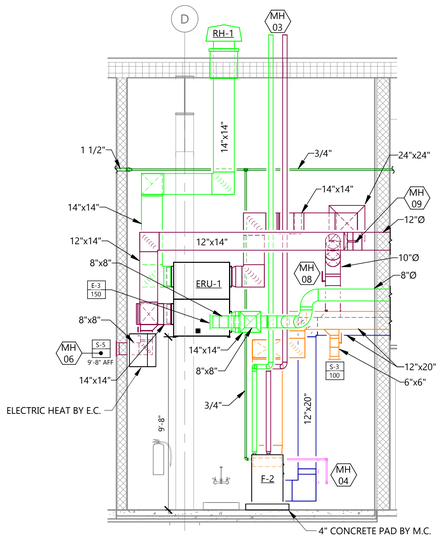

5 M201 MECH ROOM SECTION
1/4" = 1'-0"

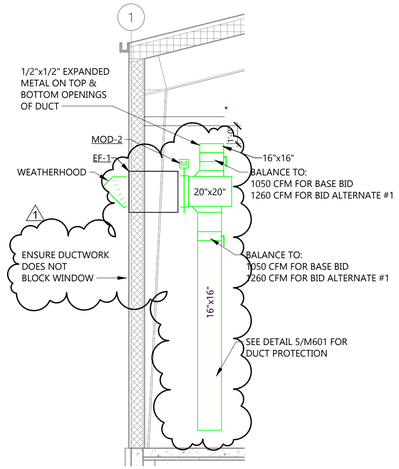

4 M201 EXHAUST FAN SECTION
1/4" = 1'-0"

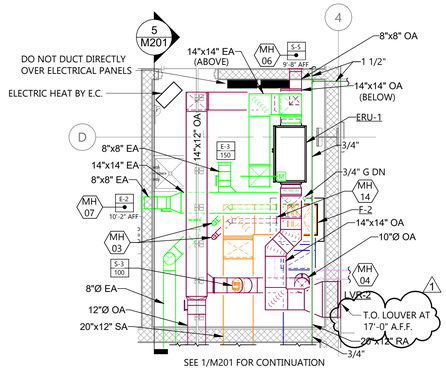

3 M201 SHOP MECHANICAL ROOM
1/4" = 1'-0"

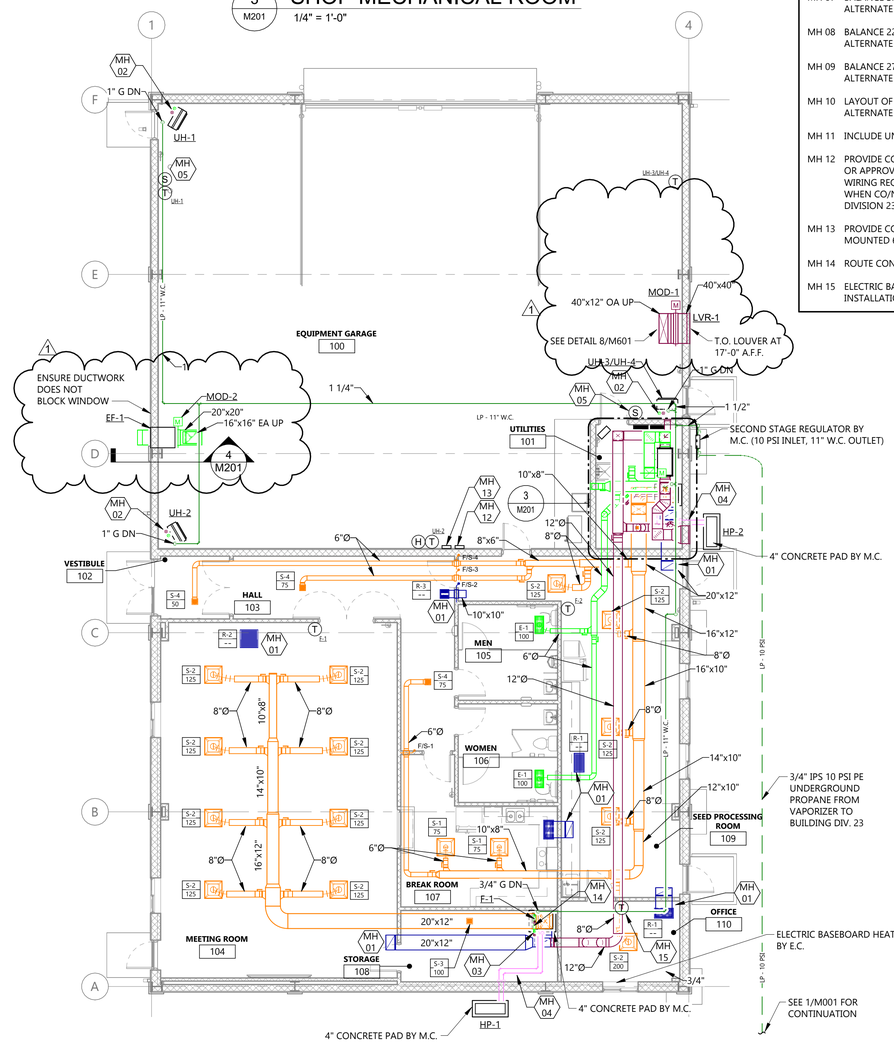

1 M201 MECHANICAL FLOOR PLAN
1/8" = 1'-0"

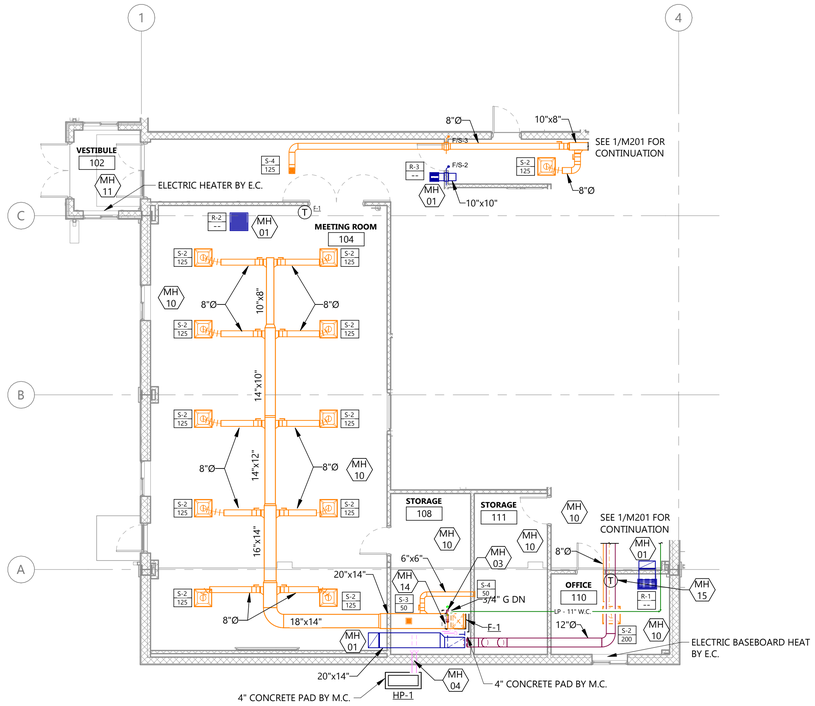

2 M201 MECHANICAL FLOORPLAN-ALT #2 ONLY
1/8" = 1'-0"

N

N

GENERAL NOTES

1. HANG SUPPLY DIFFUSERS (S-1 & S-2) FROM STRUCTURE UNDER BASE BID & INSTALL IN CEILING GRID UNDER BID ALTERNATE #2.
2. ALL DUCTWORK TO BE INSTALLED BELOW GYPSUM CEILING IN OFFICE AREA.

KEYNOTE LEGEND:

< < < INDICATES KEYNOTE ON PLAN

MH 01 PROVIDE & INSTALL ALL RETURN GRILLES & TRANSFER DUCTWORK UNDER BID ALTERNATE #2 ONLY. SEE DETAIL 4/M601 FOR ADDITIONAL INFORMATION WHEN APPLICABLE.

MH 02 UNIT HEATER COMBUSTION AIR INLET & EXHAUST VENT THROUGH ROOF USING CONCENTRIC VENT KIT (SEE DETAIL). SIZE ALL PIPING PER MANUFACTURER'S RECOMMENDATIONS.

MH 03 FURNACE COMBUSTION AIR INLET & EXHAUST VENT THROUGH ROOF PER MANUFACTURER'S RECOMMENDATIONS.

MH 04 INSTALL REFRIGERANT PIPING PER MANUFACTURER'S REQUIREMENTS.

MH 05 PROVIDE CO/NO2 DETECTOR -AGSGM100 DUEL GAS MONITOR OR APPROVED EQUAL. MOUNTED 5'-0" AFF. DETECTOR SHALL BE UL 2075 LISTED. INSTALL WITH SPLASH GUARDS OVER SENSORS. PROVIDED & INSTALLED BY DIV. 23, WIRING BY DIV 26.

MH 06 BALANCE SHOP FRESH AIR TO 140 CFM UNDER BASEBID AND 165 CFM UNDER BID ALTERNATE #1.

MH 07 BALANCE SHOP EXHAUST AIR TO 140 CFM UNDER BASEBID AND 165 CFM UNDER BID ALTERNATE #1.

MH 08 BALANCE 225 CFM FRESH AIR TO F-2 UNDER BASEBID AND 250 CFM UNDER BID ALTERNATE #2.

MH 09 BALANCE 275 CFM FRESH AIR TO F-1 UNDER BASEBID AND 370 CFM UNDER BID ALTERNATE #2.

MH 10 LAYOUT OF EQUIPMENT, DUCTWORK, PIPING, ETC. TO BE INCLUDED UNDER BID ALTERNATE #2 ONLY.

MH 11 INCLUDE UNDER BID ALTERNATE #3 ONLY.

MH 12 PROVIDE CO/NO2 VENTILATION CONTROLLER-AGSGPPS PARKSAFE CONTROL PANEL OR APPROVED EQUAL. UNIT SHALL HAVE 120/1 (V/PH) INPUT. PROVIDE RELAYS & WIRING REQUIRED TO TURN ON EXHAUST FAN & OPEN MOD FOR ASSOCIATED ROOM WHEN CO/NO2 DETECTOR ALARMS. MOUNTED 5'-0" AFF. PROVIDE & INSTALLED BY DIVISION 23, WIRING BY DIV. 26.

MH 13 PROVIDE CO/NO2 ALARM BEACON-AGSAAB ALARM BEACON OR APPROVED EQUAL. MOUNTED 6'-8" AFF. PROVIDED & INSTALLED BY DIVISION 23, WIRING BY DIV. 26.

MH 14 ROUTE CONDENSATE TO NEAREST FLOOR DRAIN.

MH 15 ELECTRIC BASEBOARD HEATER THERMOSTAT PROVIDED BY DIV. 26. THERMOSTAT INSTALLATION & LOW VOLTAGE WIRING BY DIV. 23.

EAPC
Architecture | Engineering
Interior Design | Industrial
TELEPHONE 701.609.5290
313 Main Street, Suite 200, Williston ND 58801
www.eapc.net

CLIENT
NDSU AG. SERVICE CENTER

PROJECT DESCRIPTION
NDSU IRRIGATION RESEARCH & TECHNOLOGY TRANSFER CENTER

CITY RAY
STATE NORTH DAKOTA

ISSUE DATES

MARK	DESCRIPTION	DATE
1	ADDENDUM 02	11/19/2026
CD	CONSTRUCTION DOCUMENTS	11/02/2026

PROJECT NO: 20236271
DRAWN BY: BL
CHECKED BY: JH

COPYRIGHT:
All plans, specifications, computer files, field data, notes and other documents and instruments prepared by EAPC as instruments of service shall remain the property of EAPC. EAPC shall retain all common law, statutory and other reserved rights, including the copyright there to.

STAMP

REGISTERED PROFESSIONAL ENGINEER
JERICK A. HEDGES
PE-29087
DATE: 11/19/2026
NORTH DAKOTA

DRAWING TITLE
MECHANICAL FLOOR PLAN

M201

Revit Version: 2023
Plot Date: 11/19/2026 7:25:46 AM

NEW PANEL: A1

LOCATION: UTILITIES 101
SUPPLY FROM: A
MOUNTING: Surface
ENCLOSURE:

VOLTS: 120/240 Single
PHASING: 1
WIRES: 3

A.I.C. RATING: 10K AIC
CALCULATED A.I.C.:
MAINS TYPE: MLO
MAINS RATING: 400 A
BUS RATING: 400 A

CKT	CIRCUIT DESCRIPTION	CODES	TRIP	POLES	A		B		POLES	TRIP	CODES	CIRCUIT DESCRIPTION	CKT
1	DATA RECEPT		20 A	1	360 VA	1000 VA			1	20 A		FRIDGE RECEPT RM 107	2
3	DATA RECEPT		20 A	1			360 VA	808 VA	1	20 A		SHOP LIGHTING	4
5	SPARE		20 A	1	0 VA	540 VA			1	20 A		RECEPTS RM 109	6
7	RECEPTS OFFICE		20 A	1			900 VA	1355 VA	1	20 A		LIGHTING	8
9	RECEPTS RM 107		20 A	1	720 VA	1000 VA			1	20 A	2	MIRCOWAVE RECEPTS	10
11	RECEPTS RM 104		20 A	1			1080 VA	1637 VA	1	20 A		LIGHTING	12
13	ELECTRIC HEATER		20 A	2	1000 VA	2500 VA			2	50 A	8	RANGE RECEPT	14
15							1000 VA	2500 VA					16
17	RECEPTS RM 104		20 A	1	720 VA	1000 VA			1	20 A		FRIDGE RECEPT RM 109	18
19	RECEPTS RM 5		20 A	1			540 VA	720 VA	1	20 A		RECEPTS RM 109	20
21	RECEPTS RM 109		20 A	1	900 VA	900 VA			1	20 A		RECEPTS RM 110	22
23	RECEPTS RM 104		20 A	1			720 VA	0 VA	2	20 A	8	GRAIN DRYER RECEPT	24
25	RECEPTS RM 104		20 A	1	900 VA	0 VA							26
27	RECEPTS RM 104		20 A	1			900 VA	750 VA	2	20 A		OFFICE UNIT HEATER	28
29	FRIDGE RECEPT RM 109		20 A	1	1000 VA	750 VA							30
31	VP-1 (M#12)		30 A	2			2400 VA	1500 VA	2	20 A		UTILITIES UNIT HEATER	32
33					2400 VA	1500 VA							34
35	RCP (M#13)		20 A	1			456 VA	100 VA	1	20 A		CO/NO2 CONTROLLER	36
37	SPARE		20 A	1	0 VA	100 VA			1	20 A		SMOKE DAMPERS	38
39	SPARE		20 A	1			0 VA	0 VA	1	20 A		SPARE	40
41	SPARE		20 A	1	0 VA	0 VA			1	20 A		SPARE	42
					CONNECTED LOAD:		17290 VA		17726 VA				
					EXISTING LOAD:		0 VA		0 VA				
					TOTAL LOAD:		17290 VA		17726 VA		**HIGH PHASE**		
					FEED THRU AMPS:		0 A		0 A		17726 VA		
					TOTAL AMPS:		144 A		148 A				

CODES:

1	SEE DRAWINGS FOR CONDUIT & CONDUCTORS	6	EXISTING BREAKER ON, VERIFY SPARE	11	LSI TRIP UNIT
2	EXISTING BREAKER AND LOAD TO REMAIN	7	NEW BREAKER AND LOAD	12	PROVIDE LOCK ON DEVICE
3	EXISTING BREAKER AND NEW LOAD	8	GFCI BREAKER	13	AFCI BREAKER
4	EXISTING BREAKER TO BECOME SPARE	9	DEDICATED BREAKER		
5	EXISTING BREAKER OFF, VERIFY SPARE	10	HANDLE TIED BREAKER		

LOAD CLASSIFICATION	CONNECTED LOAD	DEMAND FACTOR	ESTIMATED DEMAND	PANEL TOTALS	
Heating	6500 VA	100.00%	6500 VA		
Lighting	3800 VA	125.00%	4750 VA	**TOTAL CONN. LOAD:**	35016 VA
Motor	5356 VA	100.00%	5356 VA	**TOTAL EST. DEMAND:**	34196 VA
Power	5820 VA	100.00%	5820 VA	**TOTAL CONN.:**	146 A
Receptacle	13540 VA	86.93%	11770 VA	**TOTAL EST. DEMAND:**	142 A

NOTES:

NEW PANEL: A

LOCATION: UTILITIES 101
SUPPLY FROM: UTILITY TRANSFORMER
MOUNTING: SURFACE
ENCLOSURE:

VOLTS: 120/240 Single
PHASING: 1
WIRES: 3

A.I.C. RATING: 10 KAIC
CALCULATED A.I.C.:
MAINS TYPE: MLO
MAINS RATING: 400 A
BUS RATING: 400 A

CKT	CIRCUIT DESCRIPTION	CODES	TRIP	POLES	A		B		POLES	TRIP	CODES	CIRCUIT DESCRIPTION	CKT
1	RECEPTS RM 100		20 A	1	360 VA	6150 VA							
3	RECEPTS RM 100		20 A	1			360 VA	6150 VA	2	70 A		WATER HEATER (M#11)	4
5	RECEPTS RM 100		20 A	1	360 VA	1402 VA			1	20 A		ERU-1 (M#2)	6
7	RECEPTS RM 100		20 A	1			180 VA	960 VA	2	20 A		EF-1 (M#1)	8
9	RECEPTS RM 100	2	20 A	1	540 VA	960 VA							10
11	GRAIN SEPARATOR RECEPT		20 A	1			180 VA	672 VA	1	15 A		UH-1 (M#7)	12
13	WELDING RECEPT	8	50 A	2	4500 VA	516 VA			1	15 A		UH-2 (M#8)	14
15							4500 VA	672 VA	1	15 A		UH-3 (M#9)	16
17	WELDING RECEPT	8	50 A	2	4500 VA	456 VA			1	15 A		UH-4 (M#10)	18
19							4500 VA	1080 VA	1	20 A		EXTERIOR RECEPTS NORTH	20
21	GRAIN DRYER	8	50 A	2	4500 VA	180 VA			1	20 A		GRAIN DRYER RECEPT	22
23							4500 VA	180 VA	1	20 A		GRAIN DRYER RECEPT	24
25	EXTERIOR RECEPTS SOUTH		20 A	1	720 VA	800 VA			1	20 A		F-1 (M#3)	26
27	OH DOOR		20 A	1			2000 VA	800 VA	1	20 A		F-2 (M#4)	28
29	RECEPTS RM 9		20 A	1	360 VA	1920 VA							30
31	RECEPTS RMS 103,105,106		20 A	1			1260 VA	1920 VA	2	20 A		HP-1 (M#5)	32
33	EWC RECEPT		20 A	1	180 VA	1920 VA							34
35	EMERG LIGHTING		20 A	1			125 VA	1920 VA	2	20 A		HP-2 (M#6)	36
37	DISHWASHER RECEPT	8	20 A	1	180 VA	500 VA			1	20 A		FIRE ALARM PANEL	38
39	SPARE		20 A	1			0 VA	0 VA	1	20 A		SPARE	40
41	SPARE		20 A	1	0 VA	0 VA			1	20 A		SPARE	42
					CONNECTED LOAD:		48294 VA		49685 VA				
					EXISTING LOAD:		0 VA		0 VA				
					TOTAL LOAD:		48294 VA		49685 VA		**HIGH PHASE**		
					FEED THRU AMPS:		144 A		148 A		49685 VA		
					TOTAL AMPS:		402 A		414 A				

CODES:

1	SEE DRAWINGS FOR CONDUIT & CONDUCTORS	6	EXISTING BREAKER ON, VERIFY SPARE	11	LSI TRIP UNIT
2	EXISTING BREAKER AND LOAD TO REMAIN	7	NEW BREAKER AND LOAD	12	PROVIDE LOCK ON DEVICE
3	EXISTING BREAKER AND NEW LOAD	8	GFCI BREAKER	13	AFCI BREAKER
4	EXISTING BREAKER TO BECOME SPARE	9	DEDICATED BREAKER		
5	EXISTING BREAKER OFF, VERIFY SPARE	10	HANDLE TIED BREAKER		

LOAD CLASSIFICATION	CONNECTED LOAD	DEMAND FACTOR	ESTIMATED DEMAND	PANEL TOTALS	
Heating	6500 VA	100.00%	6500 VA		
Lighting	3925 VA	125.00%	4906 VA	**TOTAL CONN. LOAD:**	97979 VA
Motor	34574 VA	100.00%	34574 VA	**TOTAL EST. DEMAND:**	94130 VA
Power	33320 VA	100.00%	33320 VA	**TOTAL CONN.:**	408 A
Receptacle	19660 VA	75.43%	14830 VA	**TOTAL EST. DEMAND:**	392 A

NOTES:
FEED THRU LUGS

EAPC
Architecture | Engineering
Interior Design | Industrial
TELEPHONE 701.609.5290
313 Main Street, Suite 200, Williston ND 58801
www.eapc.net

CONSULTANTS

CLIENT
NDSU AG SERVICE CENTER

PROJECT DESCRIPTION
NDSU IRRIGATION RESEARCH & TECHNOLOGY TRANSFER CENTER

CITY RAY
STATE NORTH DAKOTA

ISSUE DATES

MARK	DESCRIPTION	DATE
2	ADDENDUM #2	11/19/2026
1	ADDENDUM #1	11/12/2026
CD	CONSTRUCTION DOCUMENTS	11/02/2026

PROJECT NO: 20236271
DRAWN BY: HN
CHECKED BY: JR/LS

COPYRIGHT:
All plans, specifications, computer files, field data, notes and other documents and instruments prepared by EAPC as instruments of service shall remain the property of EAPC. EAPC shall retain all common law, statutory and other reserved rights, including the copyright there to.

STAMP

REGISTERED PROFESSIONAL ENGINEER
BRIAN J. WENTLANDT
PE-27191
DATE 11/19/2026
NORTH DAKOTA

DRAWING TITLE
SCHEDULES

E901

Revit Version: 2026
Print Date: 11/19/2026 3:57:29 PM